Planetary Winch

Model: PL5-14-211-1

Est. Weight: 162 lb October 11, 2020

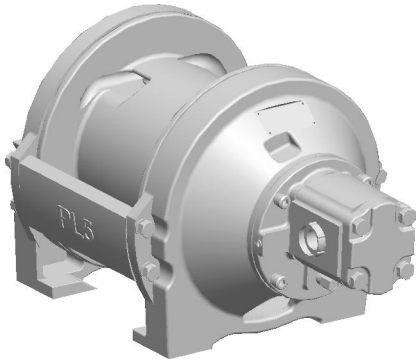

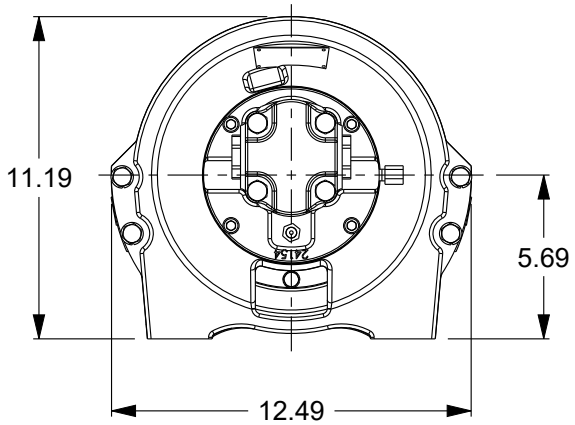

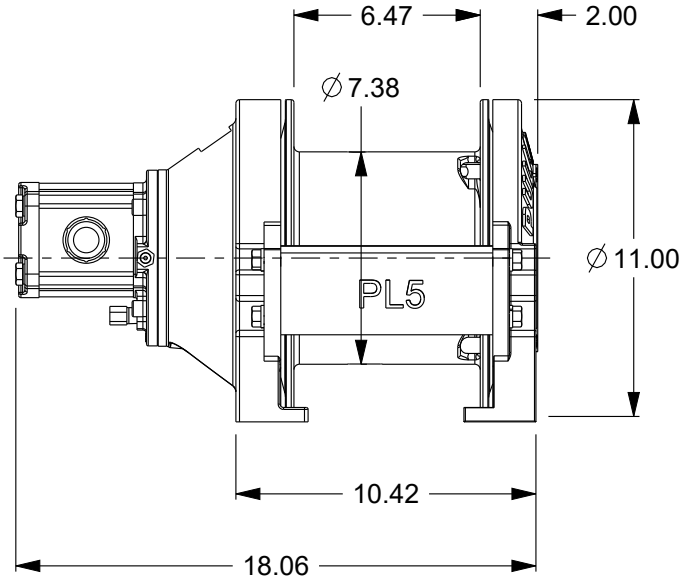

Layer	Rope Capacity (ft)	Linepull (lb)	Linespeed (fpm)
1	31	4000	72
2	65	3600	80
3	102	3270	88
4	143	2990	96

Performance is based on 11 gpm @ 2250 psi with Ø.44" rope (Maximum rope capacity)

The rated line pulls are for the product only. Consult the rope manufacturer for rope ratings.

Tulsa Winch, Inc
11135 S. James Ave
Jenks, OK 74037

Contact your TWG sales representative for additional options and features.
Visit us at www.dovertwg.com to view our entire product line.
We reserve the right to make changes without notice.

TWG Canada Consolidated, Inc.
19350 22nd Avenue
Surrey, BC V32 3S6 Canada